HITACHI

January 1991 YOKOHAMA WORKS

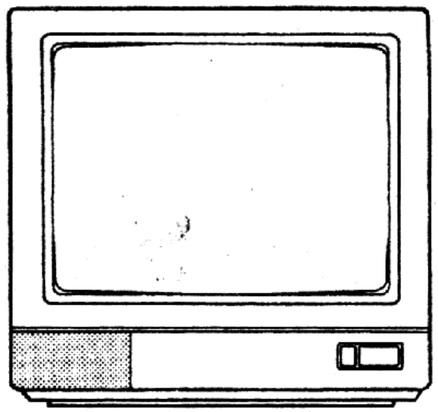

YK	No.0383E

CMT1450

PAL/SECAM

G7PN-26 Chassis

REMOTE CONTROL CIRCUIT DIAGRAM

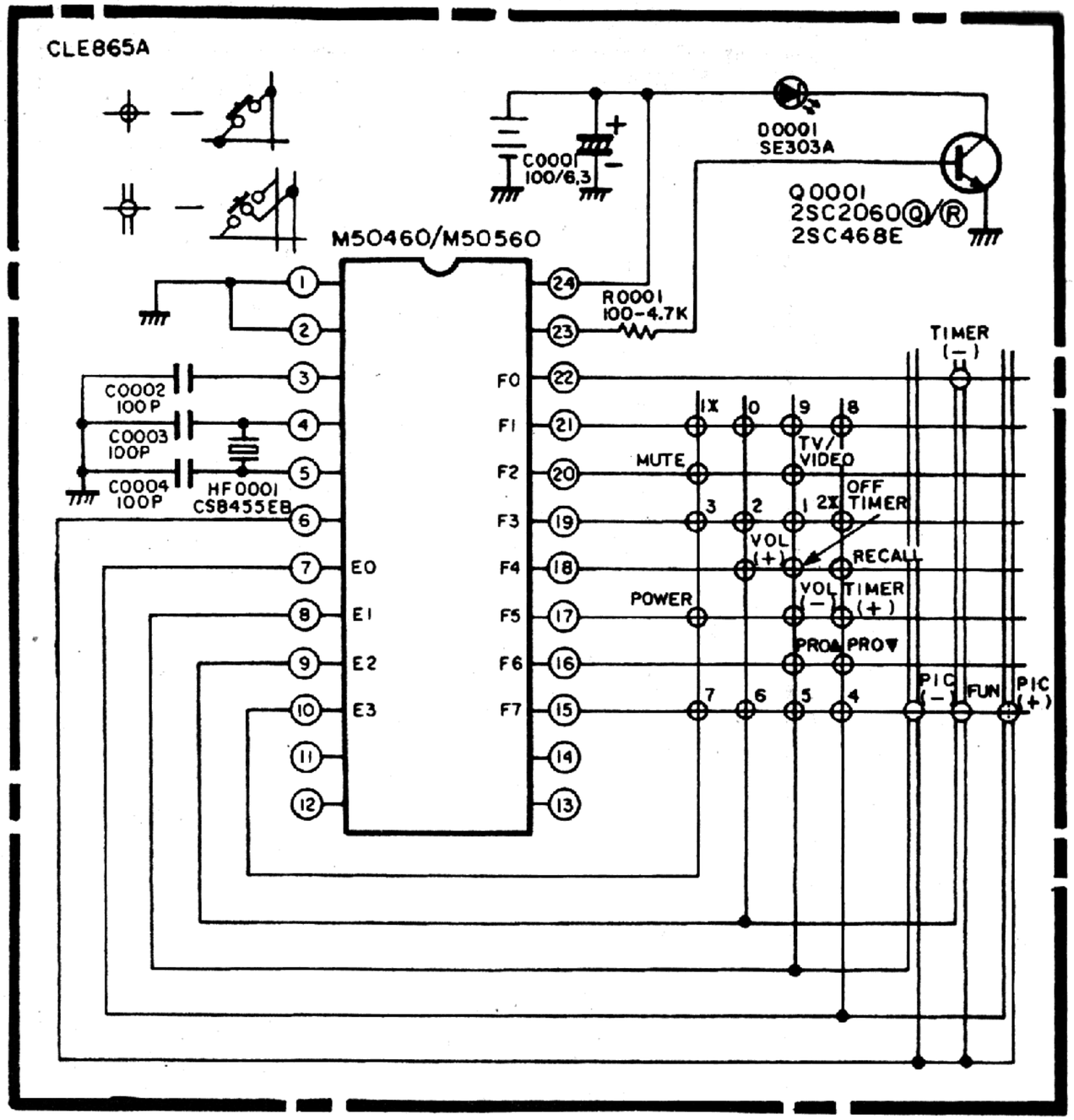

BASIC

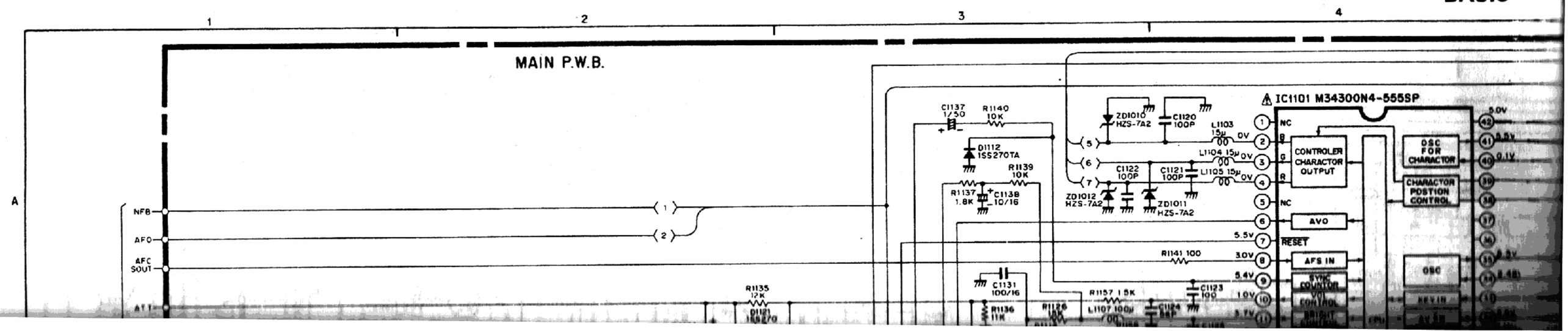

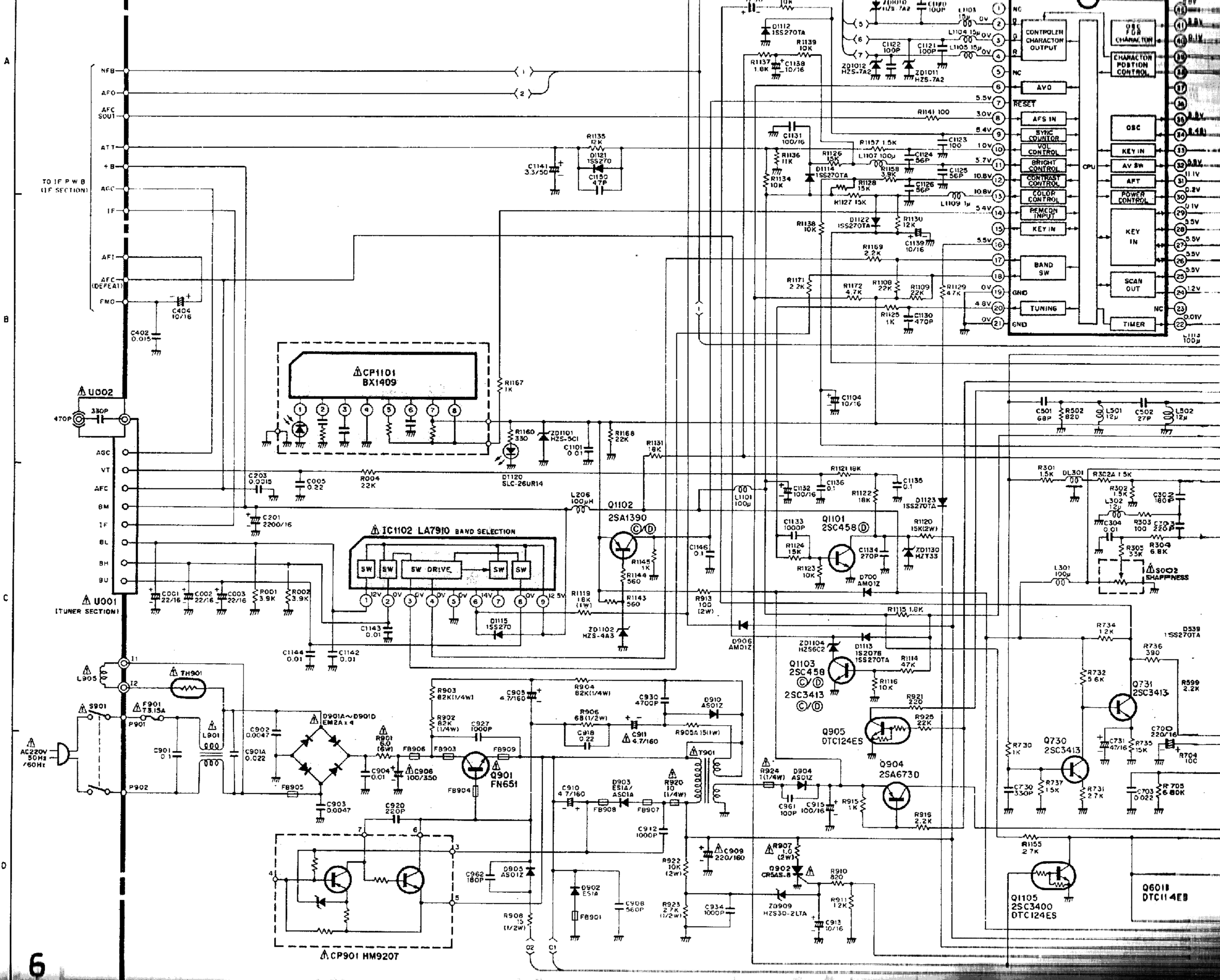
U002
U001
(TUNER SECTION)
TO IF P W B
(IF SECTION)
CP1101
BX1409
IC1102 LA7910 BAND SELECTION
SW DRIVE
CP901 HM9207
Q1102
2SA1390
Q1101
2SC458
Q1103
2SC458
2SC3413
Q905
DTC124ES
Q904
2SA6730
Q901
FN651
Q731
2SC3413
Q730
2SC3413
Q1105
2SC3400
DTC124ES
Q601B
DTC114EB
CONTROLER CHARACTOR OUTPUT
CHARACTOR POSTION CONTROL
AVO
AFS IN
SYNC COUNTOR
VOL CONTROL
BRIGHT CONTROL
CONTRAST CONTROL
COLOR CONTROL
REMCON INPUT
KEY IN
BAND SW
TUNING
CPU
OSC
KEY IN
AV SW
AFT
POWER CONTROL
SCAN OUT
TIMER
SHARPNESS
AC220V 50Hz /60Hz

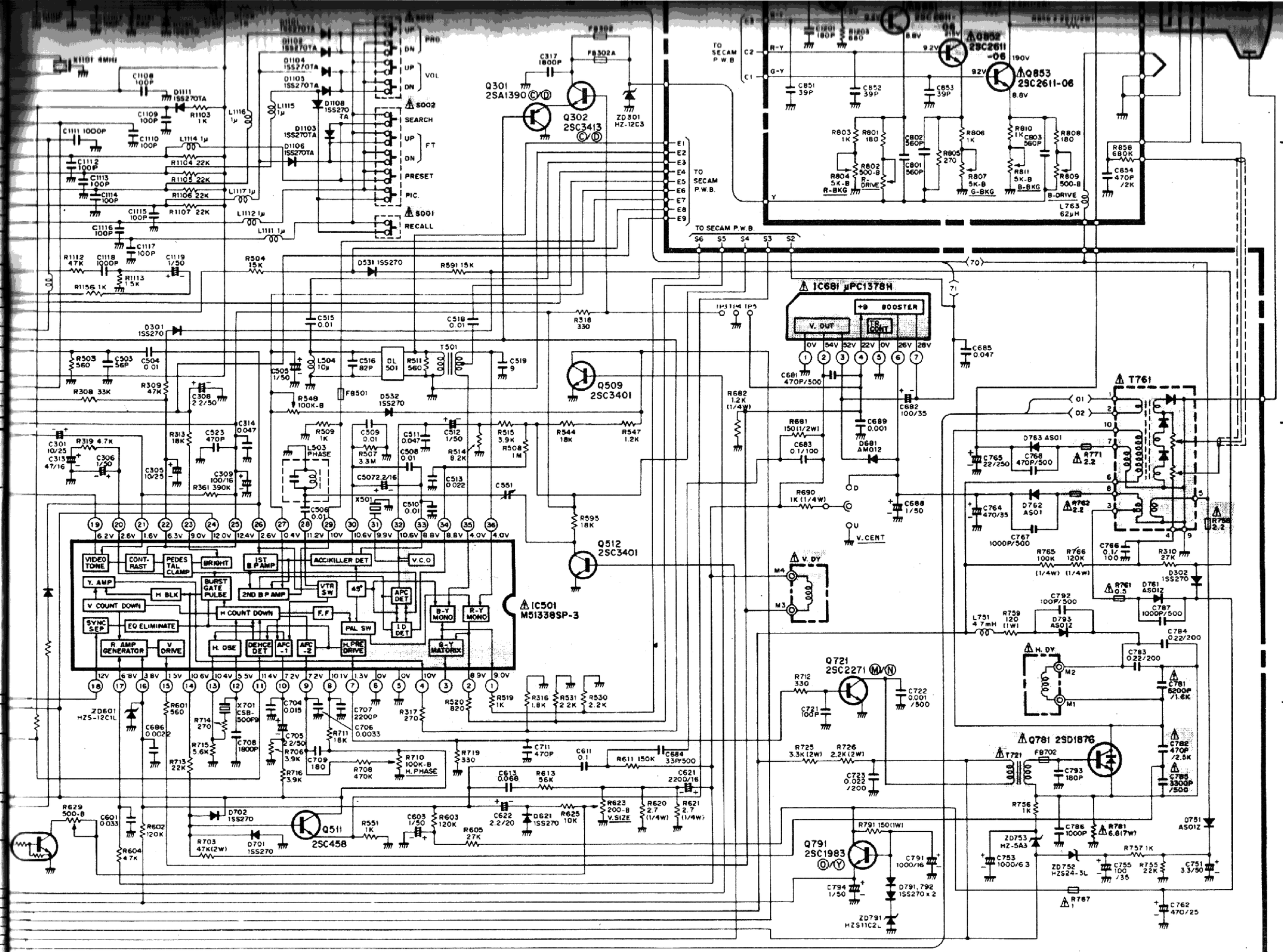
IC501 M51338SP-3
VIDEO TONE
CONT-RAST
PEDES TAL CLAMP
BRIGHT
1ST B.P AMP
ACCIKILLER DET
V.C.O
Y. AMP
H BLK
BURST GATE PULSE
2ND B.P AMP
VTR SW
49°
APC DET
V COUNT DOWN
H COUNT DOWN
F.F
B-Y MONO
R-Y MONO
SYNC SEP
EQ ELIMINATE
PAL SW
ID DET
R. AMP GENERATOR
V DRIVE
H. DSE
DEMCE DET
AFC -1
AFC -2
H.PRE DRIVE
G-Y MATRIX
IC681 μPC1378H
+B BOOSTER
V. OUT
TR CONT
V. DY
H. DY
Q721 2SC2271
Q781 2SD1876
Q791 2SC1983
Q511 2SC458
Q512 2SC3401
Q509 2SC3401
Q301 2SA1390
Q302 2SC3413
Q852 2SC2611-06
Q853 2SC2611-06
T501
T721
T761
TO SECAM P.W.B.
PRO.
VOL
SEARCH
FT
PRESET
PIC.
RECALL
R-DRIVE
B-DRIVE
R-BKG
G-BKG
B-BKG
H. PHASE
V. SIZE
V. CENT

SECAM CIRCUIT DIAGRAM

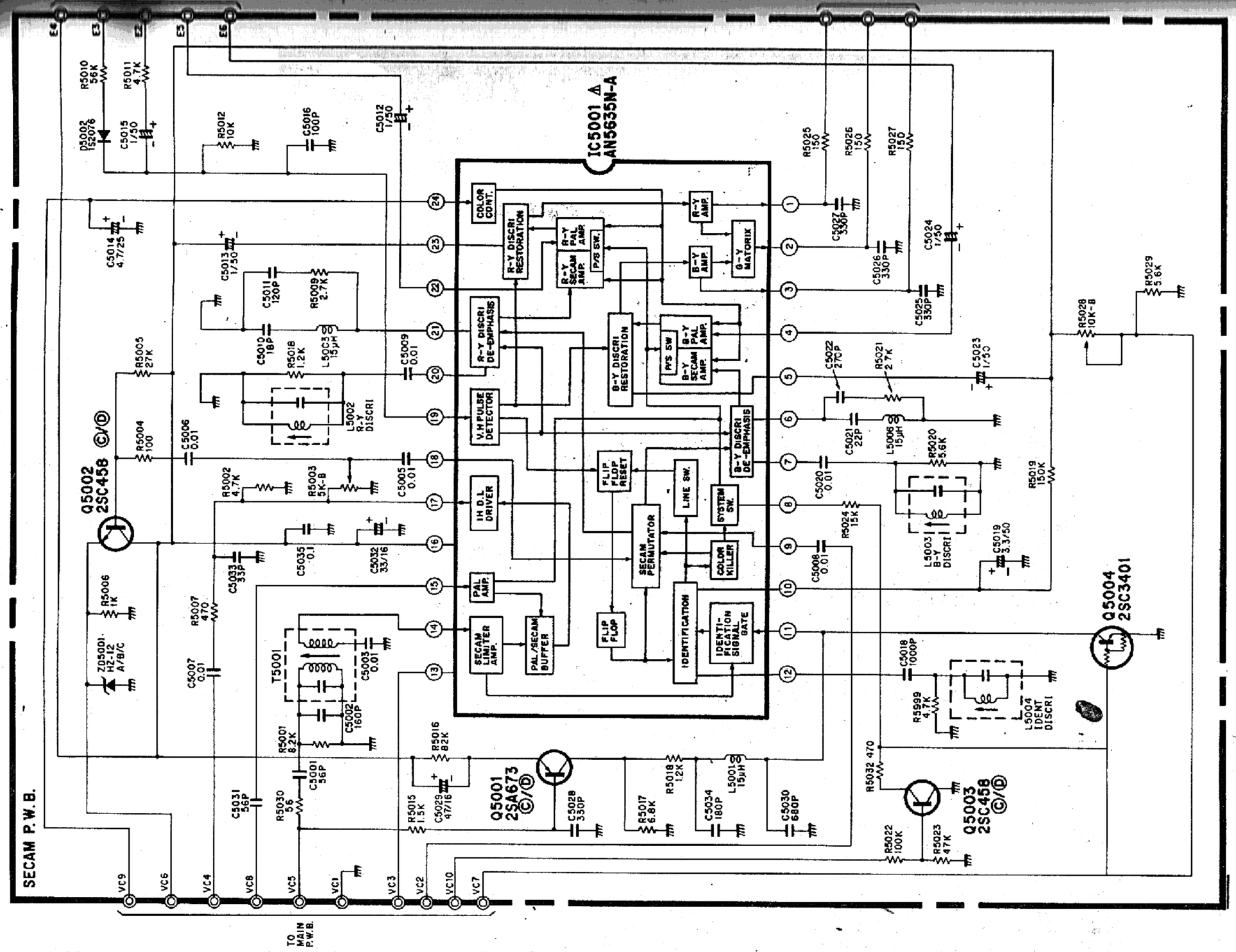
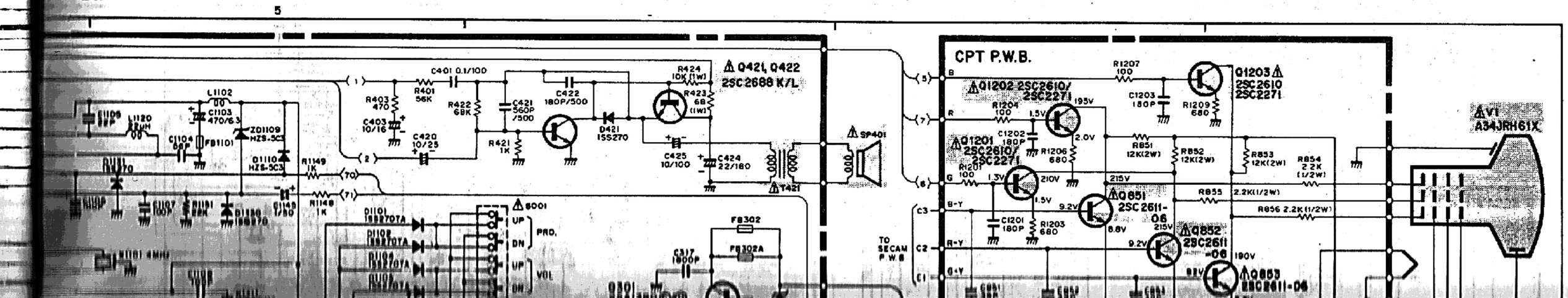
CIRCUIT DIAGRAM